SUNCOMBE
CIP, BIOWASTE & PROCESS SOLUTIONS

ChemTreatEDS™

Chemical BioWaste Decontamination Systems

The reliable, repeatable, validatable Chemical BioWaste Decontamination Kill System

Overview

Suncombe **ChemTreatEDS™** BioWaste Decontamination Chemical Kill Systems are used for the chemical treatment of effluent and waste generated by research, laboratory, production and bio-containment facilities from a single laboratory room to a large multi-user facility and for production and process waste decontamination.

Heavy duty, reliable, repeatable, validatable BioWaste Decontamination Kill Chemical System, they are available in a wide range of capacities and configurations, with every system individually designed to suit each client's specific requirements, with a dedicated Project Team, who will co-ordinate throughout the project lifecycle and agree approval prior to construction.

Using robust, proven design principles, the Suncombe **ChemTreatEDS™** BioWaste Decontamination Chemical Kill Systems are built to a generic design, with the ability to custom engineer to suit client's requirements, they achieve BioWaste Decontamination Kill for Biological Hazardous Effluent Decontamination and Growth Media Sterilisation for BSL levels 1, 2 and 3 using ultra efficient instrumentation, chemical mixing and versatile control systems.

Applications

Biologics
Laboratories
Research Institutions
Animal Laboratories
Research Laboratories
Mobile Operations
Hospitals & Clinics

European Biosafety Association EBSA

ABSANZ

ChemTreatEDS ® DATASHEET

VERSION 3.10

SUNCOMBE
CIP, BIOWASTE & PROCESS SOLUTIONS

Welcome

Since our foundation in 1961, Suncombe has pioneered the development of innovative solutions for cleaning in place, bio-waste decontamination, GMP Washers, sanitary skids and vessel skids. The business continues to be privately owned and managed day to day by Dave Adams and Steve Overton.

Supporting Dave and Steve is a close-knit, dedicated, highly motivated and long-standing team encompassing a wealth of technical experience and knowledge in all relevant disciplines, including design, manufacture, testing, installation, validation, documentation and after-sales support. All of our work is carried out across our own facilities, just off the M25 in north London.

The team employ the very latest techniques, standards and best in class solutions. Having such a strong team allows us to offer the ability to carry out all of our work in-house, under our direct control and quality management system. It also ensures that we own and preserve all the knowledge and experience gained with every project and allows us to offer continued support for all our installed systems throughout their lifetime.

Our Clientele

Our Equipment

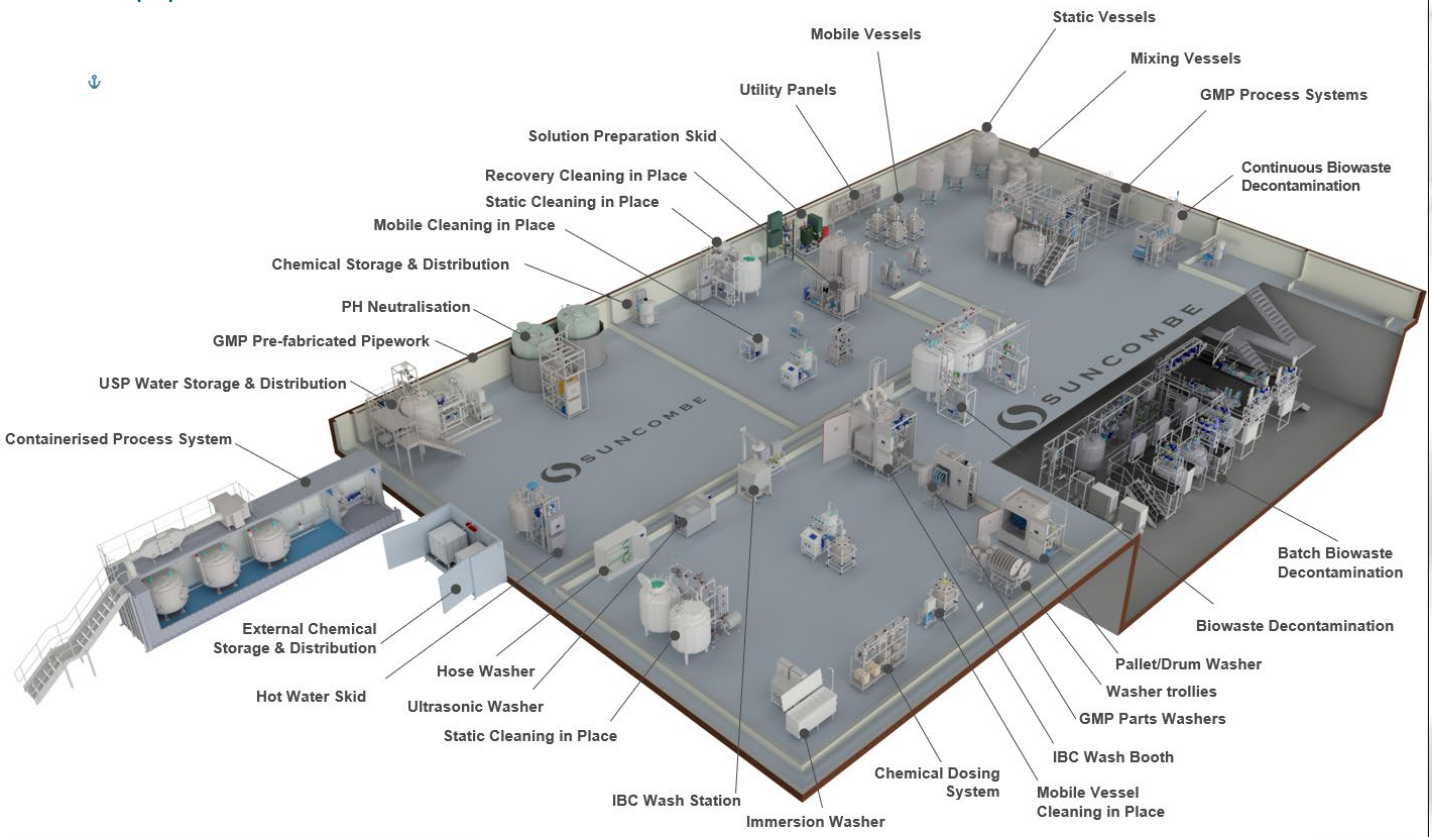

Suncombe Ltd

Jade House, Lockfield Avenue, Brimsdown, Enfield, Middlesex, EN37JY, United Kingdom

T +44(0)20-8443-3454 F +44(0)20-8443-3969

E info@suncombe.com W www.suncombe.com

ChemTreatEDS ® DATASHEET

VERSION 3.10

SUNCOMBE
CIP, BIOWASTE & PROCESS SOLUTIONS

Key Features	Benefits
High quality Thermoplastic Tanks with options for 316 stainless steel, duplex steel and other thermoplastics	Systems are constructed to the highest sanitary standards with material traceability. This ensures a fully validatable and neutralisation environment.
316L stainless steel pipework and components with options for duplex steel or thermoplastics pipework	Systems are constructed to the highest sanitary standards with 3.1/2.2 material traceability and welding dossier. This ensures a fully validatable and cleanable treatment environment.
Fully automated batch processing	The EDS process comprises two basic steps – Collection and Decontamination. The **ChemTreatEDS™** System can carry out these two steps in the same or separate tanks. Suncombe's BioSuite software enables fully automated treatment of waste and safe release to drain.
Treatment Parameters	Variable configuration to provide Concentration/Time.
Collection and Discharge Buffer Options	For large inlet flows, Integral Collection Tanks can be provided and for outlet flow limitations, integral discharge tanks can also be provided.
Vent Filter	Sterile, HEPA Vent Filter included, single, dual and duplex parallel arrangements available
Continuous monitoring of key parameters	Decontamination process is highly repeatable and validatable.
Safety	Alarms, interlocks and fail-safe design prevent waste discharge in the event of an unsuccessful treatment. This encompasses scenarios such as power loss and under-temperature events.
Siemens PLC and 12" colour HMI with options for larger HMIs	Control hardware is industry standard and supported worldwide by Siemens. Ethernet interface included for transfer of critical operating variables to other systems. Designed to enable integration to third party equipment or higher level control system.
Suncombe BioSuite software	Control software specification has been developed and proven over many years for EDS applications and includes a wide range of user or administrator configurable parameters to enable customised decontamination profiles. User passwords, Active Directory, Audit Trails, Electronic batch reports for local or network storage are possible. User interface screens and process visualisation is simple, intuitive, clear and comprehensive. Remote access options are possible if required. Software complies with FDA 21CFR and EU GMP regulations.
Fully automated batch report	Electronic pdf reporting included – printed report optional
Utility Requirements	Systems requires compressed air, water, steam and electrical utilities.
Configurable	Based on standard modules, we can supply individual units custom designed for your specific requirement.
Cleaning In Place	Prepared for CIP with optional Automatic or Manual Cleaning In Place System
Redundancy	System configurations available for N+1 Dual redundancy providing guaranteed availability
Waste Distribution	Optional sump pumps and discharge Stations

Suncombe Ltd, Jade House, Lockfield Avenue, Brimsdown, Enfield, Middlesex, EN3 7JY, United Kingdom
Tel +44(0) 208-443-3454 Fax +44(0) 208-443-3969 E-Mail: mail@suncombe.com Web: www.suncombe.com
Designers, manufacturers & installers of quality, hygienic processing and cleaning systems and Equipment

ChemTreatEDS™ Configuration Selection

When deciding on the configuration of an EDS, it's necessary to consider three key elements: - (i) daily, average and instantaneous throughput; (ii) requirement for 24 hour availability for collection; (iii) risk of unplanned downtime and if the system still needs to operate in this scenario. The EDS process comprises two basic steps – Collection and Decontamination. These two steps may be carried out sequentially in the same tank, or in separate tanks, generally as follows.

- ChemTreatEDS™ Range with One Tank – for systems with a downtime period of at least 4 hours per day when collection is not required
- ChemTreatEDS™ Range with Two Dual Purpose Tank – for systems requiring a 24 hour collection availability
- ChemTreatEDS™ Range with One Tank for Collection and One Tank for Decontamination - for systems requiring a 24 hour collection availability with large peak flows or unevenly distributed flow that require a storage buffer
- ChemTreatEDS™ Range for BSL3+ and BSL4 – these systems would be based around the same principles and are custom designed specifically for their application

All systems are available with additional equipment for dual redundancy.

ChemTreatEDS™ Configuration Options

There are various options available depending on site conditions and requirements. The graphic below details some of the common options/configurations.

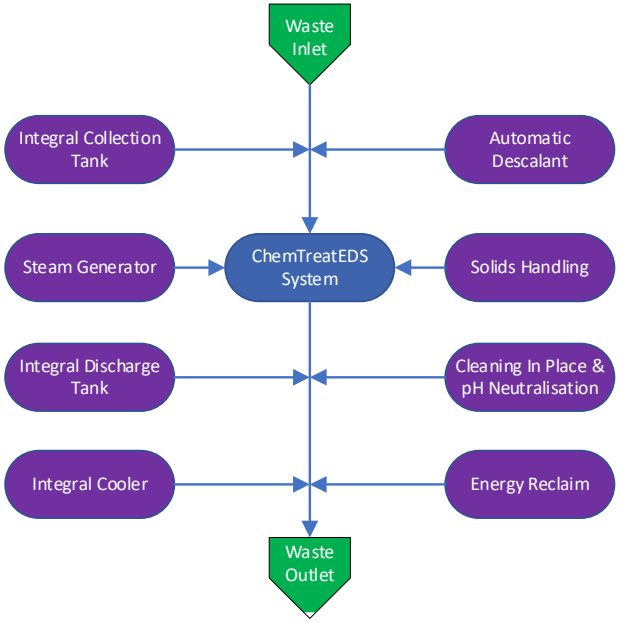

ChemTreatEDS ® DATASHEET

VERSION 3.10

SUNCOMBE
CIP, BIOWASTE & PROCESS SOLUTIONS

Capacity Table for **ChemTreatEDS™** with One Dual Purpose Collection/Treatment Tank

For systems that do not need continuous collection or with separate collection tanks

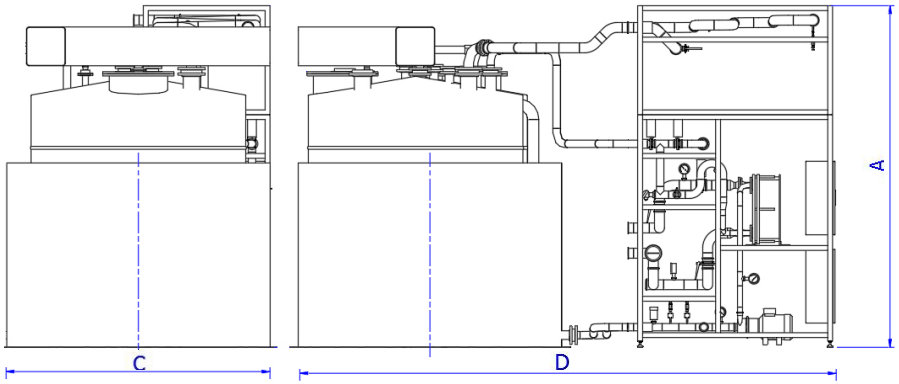

Key Features

- Single tank for collection and treatment
- Intermittent collection availability only
- Adjustable kill concentrations and adjustable time
- Suitable for BSL1, 2, 3 & 3+
- 230/400 VAC electric
- Material of Construction HDPE/316L Stainless Steel
- BioSuite Level 2000 standalone control system
- Touch panel display

Part #	Daily Capacity Litres	Storage Capacity Litres	With No Collection Tank		Dimensions		
			Collection litres per day	Treatment litres per day	A (mm)	D (mm)	C (mm)
ChemTreatEDS 100/1	0 - 500	100	500	400	2000	1900	1000
ChemTreatEDS 250/1	0 - 1250	250	1250	1000	2000	1900	1000
ChemTreatEDS 500/1	0 - 2500	500	2500	2000	2000	2300	1000
ChemTreatEDS 1000/1	0 - 5000	1000	5000	4000	2300	3300	2000
ChemTreatEDS 1500/1	0 - 7500	1500	7500	6000	2300	3600	2300
ChemTreatEDS 2000/1	0 - 10000	2000	10000	8000	2500	3600	2300
ChemTreatEDS 3000/1	0 - 15000	2000	12000	12000	2900	3800	2500
ChemTreatEDS 5000/1	0 - 20000	5000	20000	20000	2900	4200	2900

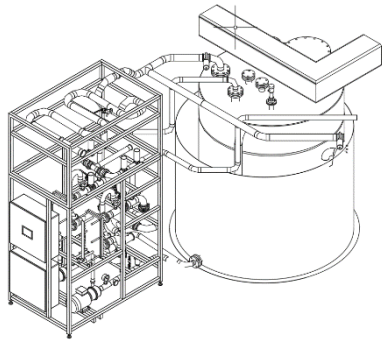

ChemTreatEDS ® DATASHEET

VERSION 3.10

SUNCOMBE
CIP, BIOWASTE & PROCESS SOLUTIONS

Capacity Table for **ChemTreatEDS™** with Two Dual Purpose Collection/Treatment Tank

For systems requiring a 24 hour collection availability

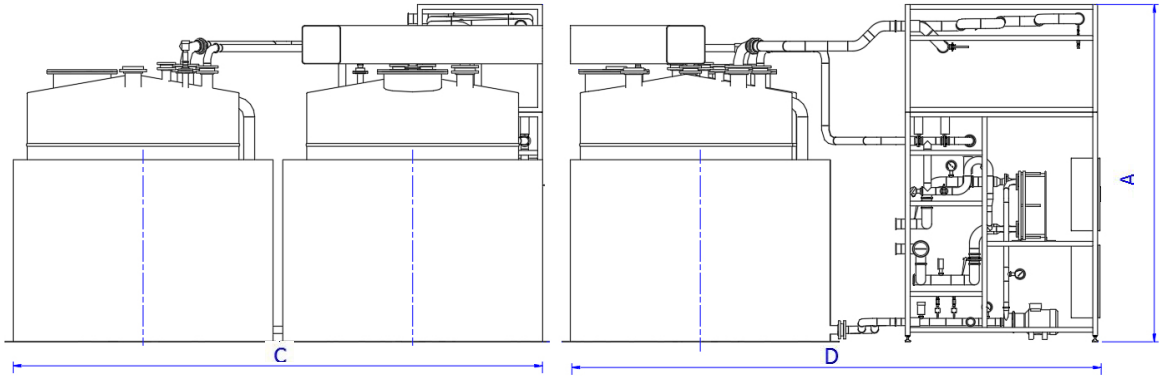

Key Features

- Two tanks for collection and treatment
- 24 hour collection availability
- Adjustable kill concentrations and time
- Suitable for BSL1, 2, 3 & 3+
- 230/400 VAC
- Material of Construction HDPE/316L Stainless Steel
- BioSuite Level 2000 standalone control system
- Touch panel display

Part #	Daily Capacity Litres	Storage Capacity Litres	With Two Dual Purpose Tanks		Dimensions		
			Collection litres per day	Treatment litres per day	A (mm)	D (mm)	C (mm)
ChemTreatEDS™ 100/2	0 - 500	200	500	400	2000	1900	1600
ChemTreatEDS™ 250/2	0 - 1250	500	1250	1000	2000	1900	1600
ChemTreatEDS™ 500/2	0 - 2500	1000	2500	2000	2000	2300	2000
ChemTreatEDS™ 1000/2	0 - 5000	2000	5000	4000	2300	3300	4000
ChemTreatEDS™ 1500/2	0 - 7500	3000	7500	6000	2300	3600	4600
ChemTreatEDS™ 2000/2	0 - 10000	4000	10000	8000	2500	3600	4600
ChemTreatEDS™ 3000/2	0 - 15000	6000	12000	12000	2900	3800	5000
ChemTreatEDS™ 5000/2	0 - 20000	10000	20000	20000	2900	4200	5800

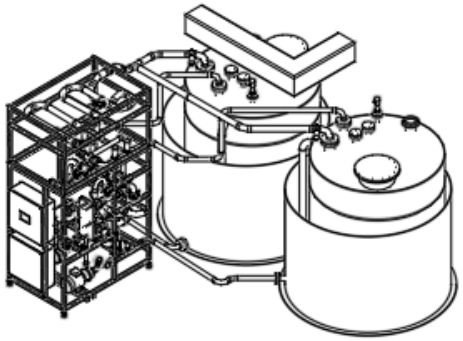

Collection and Discharge Vessel Configurations

The Suncombe Batch effluent decontamination systems can be configured with custom Collection Vessel and Discharge Vessel Combinations to reflect any BioWaste capacity Requirement.

Capacity: Vessels are available from 200 litre capacity to 20,000 litre capacity or larger.

Number: Vessels can be supplied as single vessel to hold the entire waste storage capacity or in quantities of 2, 3 or more vessels to provide different processing waste storage requirements and/or dual redundancy.

Decontamination In Place: Vessels can be supplied with specific requirements for Sterilisation and Decontamination In Place (DIP), which can alter the design of the Vessels from simple atmospheric sealed vessels to full pressure vessels suitable for thermal sterilisation. Configurations can also include full Cleaning In Place (CIP) and chemical treatment, as well as pH control.

Materials of Construction: typically, Vessels are manufactured from HDPE thermoplastic or 316L Stainless Steel Vessels. Varied duplex stainless steels and Hastelloy are also available for extended corrosion resistance. The Vessels typically are fully sanitary design to ensure all parts can be CIP'ed and DIP'ed.

Geometry: The geometry of Collection or Reception Vessels depends somewhat on the available location and available envelope. Typically, most smaller capacities (up to 1,000 litre) are vertical cylindrical vessels, medium capacities (1,000 - 6,000 litre) are typically either vertical or horizontal and most vessels over 6,000 litre capacity are horizontal.

ChemTreatEDS ® DATASHEET

VERSION 3.10

SUNCOMBE
CIP, BIOWASTE & PROCESS SOLUTIONS

Typical Collection and Discharge Vessel Dimensions

Suncombe Collection and Discharge Vessels are available in any capacity. Typical dimensions are detailed below for some common capacity vessels.

Vertical Configuration

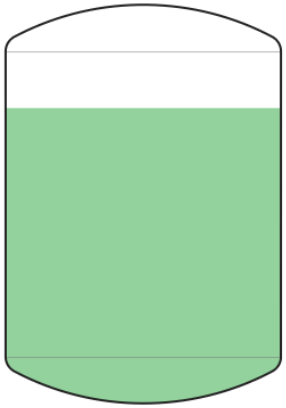

Horizontal Configuration

Capacity (litres)	Orientation	Diameter (mm)	Length (mm)	Height (mm)
200	Vertical	500	-	1000
200	Horizontal	500	1000	-
500	Vertical	750	-	1250
500	Horizontal	750	1250	-
1000	Vertical	950	-	1350
1000	Horizontal	950	1500	-
2000	Vertical	1200	-	1600
2000	Horizontal	1200	2000	-
3000	Vertical	1400	-	1800
3000	Horizontal	1400	2200	-
5000	Vertical	1700	-	2200
5000	Horizontal	1600	2400	-
10000	Vertical	2000	-	2700
10000	Horizontal	2000	3200	-
20000	Vertical	2700	-	3300
20000	Horizontal	2500	3700	-

- Dimensions noted are typical only and actual dimensions should be confirmed by Suncombe engineers before use
- Alternative length/height/diameter ratios are available with dimensions to suit available space, enquire with Suncombe engineers for more details
- Collection Vessels are available in 316 stainless steel, Hastelloy, duplex alloys and thermoplastics depending on application

ChemTreatEDS ® DATASHEET

VERSION 3.10

SUNCOMBE
CIP, BIOWASTE & PROCESS SOLUTIONS

Containerised Systems

Suncombe offer a full range of containerised systems, placing us at the forefront of the latest industrial trends. The complete range of Suncombe BioWaste Decontamination Systems are all available as containerised versions mounted in shipping containers. Available in 3, 6 or 12 metre (10, 20 or 40 ft) length, the containers are optimised to provide an internal clean space using epoxy or stainless flooring, walls and ceilings. The containers are pre-configured with pipework, electrics, lights, heating and application specific items such as Emergency doors, knock out panels, HVAC, utility conditioning, chemical storage and distribution, showers, sinks, dunk tanks, access steps, roof mounted equipment etc.

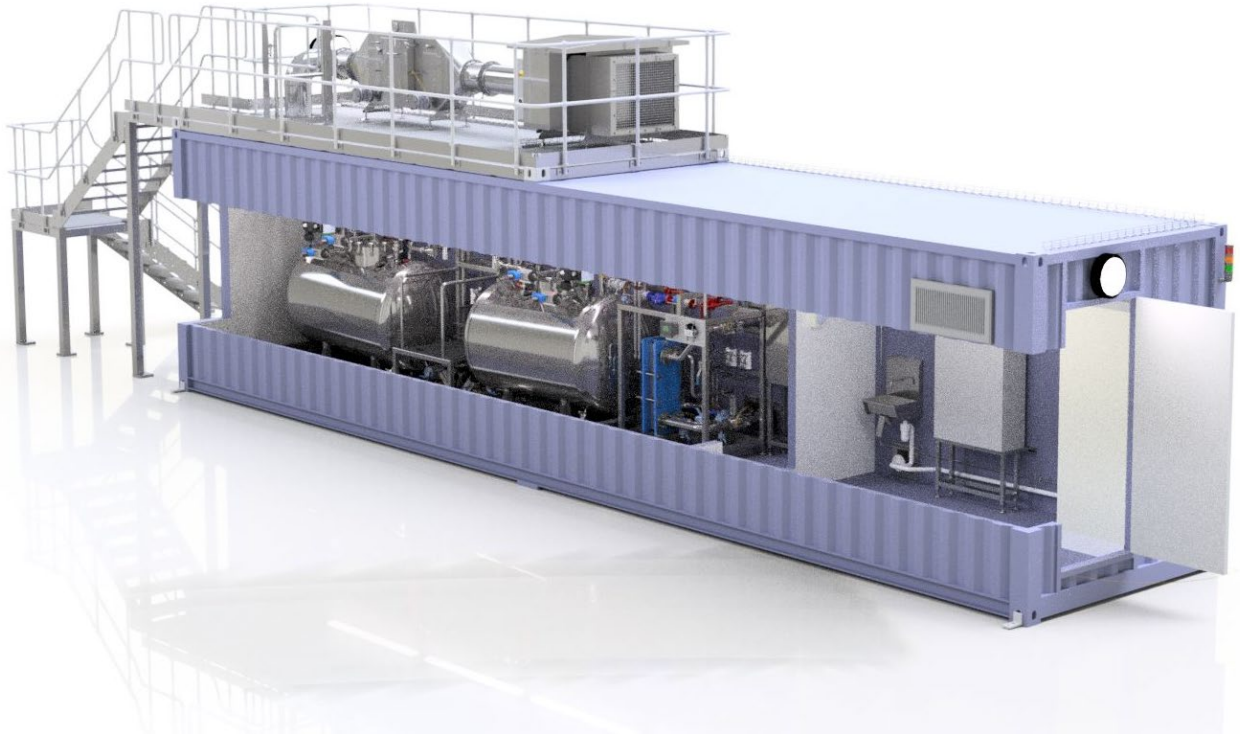

ChemTreatEDS ® DATASHEET

VERSION 3.10

SUNCOMBE
CIP, BIOWASTE & PROCESS SOLUTIONS

Control and Automation System

Renowned for their ease of operation and versatility, Suncombe systems are designed and manufactured for reliability, repeatability and longevity, whilst complying with the highest international regulatory standards. With dedicated in-house automation personnel for control design and software, Suncombe engineers have tremendous experience in incorporating a broad range of control solutions to suit your specific control requirements.

Developed to the GAMP 'V' model (Verification and Validation), system life cycle approach, which links the three main qualification activities (installation, operation and performance) back to the design process, the system software is produced in house by qualified software engineers, encompassing software development standards, quality control systems and change control during and post development.

Standards and Guidelines

- ✓ GAMP Guidelines
- ✓ FDA 21CFR11 Compliance
- ✓ ASME BPE
- ✓ EU Machinery Directive
- ✓ EU Low Voltage Directive
- ✓ EU cGMP Guidelines
- ✓ EU EMC Electromagnetic Compatibility Directive
- ✓ IEC 61131 for PLCs
- ✓ EN 60204 Safety of machinery
- ✓ EN 60439 Low Voltage Switchgear
- ✓ CE and UKCA Marks

Typical Operator Interface

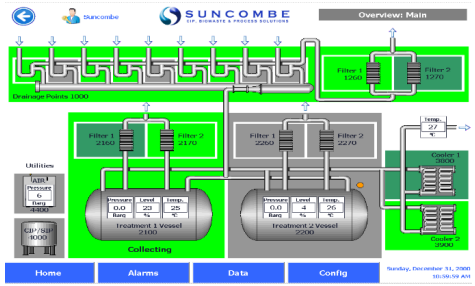

SUNCOMBE
CIP, BIOWASTE & PROCESS SOLUTIONS

Our Sustainability Operations

Sustainability of Suncombe Equipment

As a company, we recognise the importance of sustainability and the need to minimise our environmental impact. All Suncombe equipment has been re-developed for sustainability purposes and incorporates techniques and methodologies to minimise impact on the environment, including technologies that reduce energy consumption, emissions, and waste, as well as adopting practices that promote sustainability and reduce the environmental impact of operations.

Social Responsibility

Our company philosophy is one of Social Responsibility and under this banner we are fully committed to the need to balance economic growth with environmental stewardship and social responsibility.

Overall, Suncombe demonstrates a commitment to sustainability and environmental responsibility in our operations and products. For further details Suncombe have produced Sustainability and Lifecycle White Papers available **on request**

Here are some of the ways we achieve this:

- ✓ Efficient use of resources: Suncombe uses energy-efficient technologies in our equipment, which helps to reduce energy consumption and carbon emissions.
- ✓ Waste reduction: Suncombe strives to reduce waste throughout our operations, from manufacturing to product disposal. We use sustainable materials and designs that minimise waste and maximise product lifespan.
- ✓ Recycling: Suncombe promotes recycling and reusing of materials to reduce waste. We also recycle our own equipment where possible.
- ✓ Compliance with regulations: Suncombe adheres to environmental regulations and standards set by governing bodies, ensuring that our operations do not harm the environment.
- ✓ Green initiatives: Suncombe invests in research and development of new, sustainable technologies and processes to further reduce our environmental impact.
- ✓ Lifecycle Considerations: The company emphasizes the entire lifecycle of our equipment, from design and manufacturing to use and disposal. We strive to select materials and components that are environmentally friendly and can be recycled or disposed of responsibly. Featuring design with margin, upgrading and future-proofing extends the equipment lifecycle.